YORK®	CX-MicroGateway for YCAS with 2-Compressor Chillers	
INSTALLATION MANUAL	New Release	Form 450.24-N6 (804)

IMPORTANT!

READ BEFORE PROCEEDING!

GENERAL SAFETY GUIDELINES

This equipment is a relatively complicated apparatus. During installation, operation, maintenance or service, individuals may be exposed to certain components or conditions including, but not limited to: refrigerants, oils, materials under pressure, rotating components, and both high and low voltage. Each of these items has the potential, if misused or handled improperly, to cause bodily injury or death. It is the obligation and responsibility of operating/service personnel to identify and recognize these inherent hazards, protect themselves, and proceed safely in completing their tasks. Failure to comply with any of these requirements could result in serious damage to the equipment and the property in which it is situated, as well as severe personal injury or death to themselves and people at the site.

This document is intended for use by owner-authorized operating/service personnel. It is expected that this individual possesses independent training that will enable them to perform their assigned tasks properly and safely. It is essential that, prior to performing any task on this equipment, this individual shall have read and understood this document and any referenced materials. This individual shall also be familiar with and comply with all applicable governmental standards and regulations pertaining to the task in question.

SAFETY SYMBOLS

The following symbols are used in this document to alert the reader to areas of potential hazard:

DANGER indicates an imminently hazardous situation which, if not avoided, will result in death or serious injury.

CAUTION identifies a hazard which could lead to damage to the machine, damage to other equipment and/or environmental pollution. Usually an instruction will be given, together with a brief explanation.

WARNING indicates a potentially hazardous situation which, if not avoided, could result in death or serious injury.

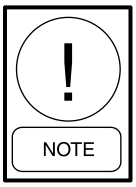

NOTE is used to highlight additional information which may be helpful to you.

CHANGEABILITY OF THIS DOCUMENT

In complying with YORK's policy for continuous product improvement, the information contained in this document is subject to change without notice. While YORK makes no commitment to update or provide current information automatically to the manual owner, that information, if applicable, can be obtained by contacting the nearest YORK Sales, Service and Authorized Distributor offices.

It is the responsibility of operating/service personnel as to the applicability of these documents. If there is any question in the mind of operating/service personnel as to the applicability of these documents, then, prior to working on the equipment, they should verify with the owner whether the equipment has been modified and if current documentation is available.

SUMMARY OF CHANGES

804 Original Release

REFERENCE INSTRUCTIONS

DESCRIPTION	FORM NO.
CX-MicroGateway Specification	450.24-S8
PICS/BIBBs Statement	450.24-TD8
Renewal Parts List	450.00-RP1

TABLE OF CONTENTS

GENERAL SAFETY GUIDELINES 2
REFERENCE INSTRUCTIONS 3
SECTION 1 – GENERAL INFORMATION 7
Overview 7
SECTION 2 – INSTALLATION 9
Installation Guidelines 9
Environment 9
Electrical Noise 9
Ground/Earth 9
Protection of Communication Ports 10
Mounting 10
York Talk Connection 12
Controls Network Connection 12
Switch and Jumper Settings 12
CX-MicroGateway Settings 13
Micro Panel Settings 14
SECTION 3 – COMMISSIONING 15
General 15
PC Communication 15
Changing Port 2 Communication 15
Configuration 15
Data Transfer 16
History 16
Alarms 16
Associated Graphics 17
SECTION 4 – TROUBLESHOOTING 19
LEDs 19
Software Version 19
Battery Replacement 19
Fuse Replacement 20
APPENDIX 21
Specifications 21

FIGURE LIST

Figure 1. CX-MicroGateway Kit 371-04483-002 7
Figure 2. Wiring and Connections 11
Figure 3. BACnet Control Network Connection 12
Figure 4. CX-MicroGateway DIP Switch Location 13
Figure 5. Micro Panel Settings 14
Figure 6. Default Graphic 17
Figure 7. Battery and Fuse Locations 20

TABLE LIST

Table 1 – York Talk Connections 12
Table 2 – Analog History 16
Table 3 – Digital History 16
Table 4 – Analog Alarms 17
Table 5 – Status LED Codes 19

THIS PAGE INTENTIONALLY LEFT BLANK

SECTION 1

GENERAL INFORMATION

Overview

The CX-MicroGateway (371-04483-002) is a field-installed kit that provides a BACnet interface to a YORK YCAS Style G 2-Compressor chiller. Installed within the existing chiller micro panel, the CX-MicroGateway exposes chiller data to a YORK BACnet MS/TP network. Various setpoints can also be transmitted to the chiller.

NOTE

NOTE: Only units which use Style G compressors provide a mounting location for the CX-MicroGateway. Older styles require custom mounting due to wire lengths and modification of the factory configuration file.

The CX-MicroGateway is preconfigured with the YCAS 2-Compressor chiller points map. The CX-MicroGateway will also collect some history data. A Power Supply, included with the kit, provides 12 VDC to the CX-MicroGateway board. All installation hardware and necessary wiring is included with the kit. A mounting plate and standoffs provide a mounting location for the CX-MicroGateway card inside the chiller micro panel.

NOTE

NOTE: For YCAS chillers with 3 or 4 compressors, use CX-MicroGateway kit number 371-04483-003.

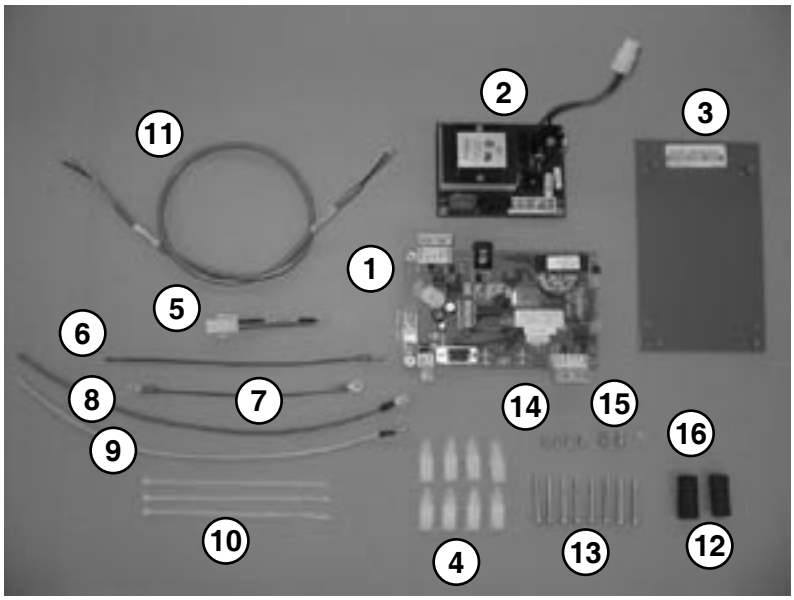

1. CX-MicroGateway Board
2. Power Supply
3. Mounting Plate
4. Nylon Standoffs (8x)
5. Power Supply Plug
6. Ground Wire - Single Ring Terminal
7. Ground Wire - Two Ring Terminals
8. Neutral Wire - Blue/Gray
9. Power Wire - Red
10. Wire Tie (3x)
11. Communications Cable
12. Heat Shrink Tubing (2x)
13. #8 x 1-1/4 in. Self-Tapping Screw (8x)
14. M3 x 6 mm Screw/Washer (4x)
15. #8 x 3/8 in. Self-Tapping Screw
16. #8 Internal Tooth Lock Washer (2x)

Figure 1. CX-MicroGateway Kit 371-04483-002

Port 1 of the CX-MicroGateway connects to the YORK control system and Port 2 connects to the chiller. A DIP switch sets the MAC Address of the CX-MicroGateway on the control network.

Once installed, the CX-MicroGateway operates as configured from the factory. If additional functionality is desired, IcE can be used to direct preconfigured data, such as alarming and histories, to the appropriate location.

SECTION 2

INSTALLATION

Installation Guidelines

This manual assumes the installer is competent in environments with moving machinery and is able to recognize and protect against any inherent hazards, such as, but not limited to, refrigerants, oil, corrosive chemicals or gases, materials under pressure, rotating parts, and both high and low voltages. Each of these items has the potential, if misused or handled improperly, to cause bodily injury or death.

It is the obligation and responsibility of the operating/service personnel to identify and recognize inherent hazards, protect themselves, and proceed safely in completing their tasks. Failure to comply with any of these requirements could result in serious damage to the equipment, as well as severe personal injury or death. In addition to following standard local, state and country codes and procedures, it is recommended that a lockout procedure be used to prevent inadvertent start up of equipment during installation and maintenance procedures.

All wiring should be carried out in a safe and neat manner and should always comply in all respects to the latest edition of any local, state or country codes that may be applicable. The wiring should be installed in a manner that does not cause a hazard and is protected against electrical and mechanical damage.

Care should also be taken when mounting the enclosure so access to other equipment within the vicinity is not restricted.

Environment

The CX-MicroGateway is designed to be installed inside a chiller micro panel. However, within this environment, it must be protected from the direct influence of the elements within the following:

Temperature: 0 to 160° F (-18 to 71° C).

Humidity: 10% to 95% non-condensing.

If these environmental constraints cannot be met, the addition of a fan or heater to maintain the temperature and humidity inside the enclosure may be required.

WARNING

WARNING: Never install the components in an element that does not meet the minimum environmental requirements.

Electrical Noise

As with all electrical equipment, the CX-MicroGateway may be affected by external electrical noise. This noise may take the form of Radio Frequency Interference (RFI) or Electro-Magnetic Interference (EMI). To minimize the affects of electrical noise, be sure to use shielded communications cable, routing it away from high voltage cables, high voltage transformers, breakers, and high frequency drives.

Ground/Earth

All ISN controllers are designed to use the building ground (earth) as a reference point. This electrical orientation helps maintain all electronic components communicating to the controller within their specified voltage limits.

CAUTION

CAUTION: The controller must connect to a true building ground. Failure to do so may cause equipment damage and will void all warranty claims.

Electrical grounding also protects the controller from the effects of lightning strikes. When lightning strikes near an ISN installation, it alters the potential of the building's ground. If the ISN controller has been properly grounded, it will respond to this change much faster than if the ground connection is inadequate. Controllers that are poorly grounded provide a lower resistance path through their signal or power connections than the actual ground of the building. Under these circumstances large surge currents may flow through the controller and result in component failure.

An example of a poor ground would be a galvanized steel cold water pipe. As the pipe corrodes it no longer acts as a true ground. The corrosion acts as an insulator, raising the potential of the pipe with respect to earth ground.

YORK strongly recommends that the building's ground be checked prior to the start of the installation. The power distribution panel should be checked to ensure that it is not connected to a corroded or galvanized pipe. As a minimum, it must be connected with 14 AWG wire.

Protection of Communication Ports

The most common circuits damaged are communication components, such as RS485 and RS232 drivers.

When using RS485 technology it is possible that electrical disturbances, such as voltage spikes, can damage a circuit board. The CX-MicroGateway includes tranzorbs at the RS485 ports to protect against damaging electrical spikes and stray voltage. It is recommended that all devices on an RS485 network be equipped with protection against electrical disturbance.

Mounting

The following instructions are for installing a CX-MicroGateway kit (371-04483-002) in a YCAS 2-Compressor chiller micro panel.

DANGER

DANGER: Always disconnect power before working inside a chiller micro panel. Dropped tools and hanging wires can cause short circuits.

WARNING

WARNING: Personnel should always be grounded before touching any electronic components. An Anti-Static Ground Strap is recommended. As a minimum, firmly grasp grounded metal before working on the unit.

1. Disconnect power to the chiller micro panel and follow standard lock out procedures to prevent electrocution and inadvertent activation.
2. Open the micro panel door. Locate the mounting area to the right of the micro board. Ensure that the CX-MicroGateway mounting area is clear.
3. Install the eight nylon standoffs (4) in the square holes in the chiller micro board mounting plate.
4. Secure the Power Supply (2) and mounting plate (3) to the nylon standoffs using eight #8 x 1-1/4 in. screws (13).
6. Attach the CX-MicroGateway (1) to the mounting plate using four M3 x 6 screws (14). Place one end of the ground wire (7) under the lower right mounting screw before tightening.
7. Connect the remaining end of the ground wire (7) to the micro panel mounting plate using a #8 x 3/8 in. self-tapping screw (15) and #8 lock washer (16).

NOTE

NOTE: To insert wires into the TB1 connector on the Power Supply, insert a small screwdriver into the connector to release the clamp while inserting the wire.

8. Connect the stripped end of the red power wire (9) to L on the TB1 connector on the Power Supply.
9. Connect the stripped end of the blue/gray neutral wire (8) to N on the TB1 connector on the Power Supply.
10. Insert the stripped end of the ground wire (6) to E in the TB1 connector on the Power Supply. Connect the ring terminal end to the existing ground screw on the micro panel. Include a #8 lock washer (16) between the ring terminal and the screw head.
11. Remove the 120 VAC line wire from the transformer on the micro panel. Attach this connector to the piggy-back connector of the power wire (9). Place heat shrink tubing (12) over the connector assembly and apply heat until the tubing shrinks.
12. Repeat step 11 using the 120 VAC neutral wire from the transformer and the blue/gray neutral wire (8).

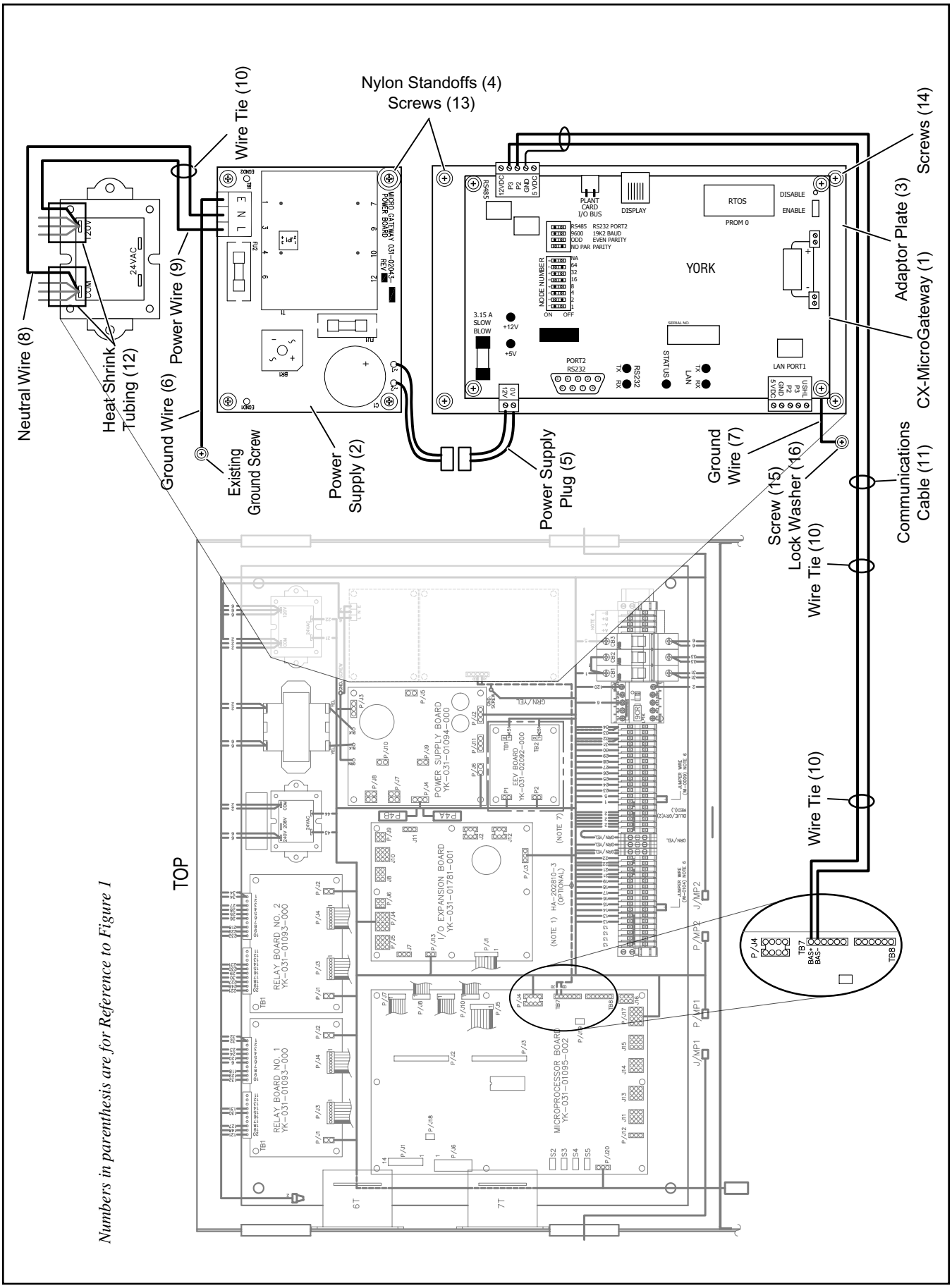

Figure 2. Wiring and Connections

13. Re-attach the wires from steps 11 and 12 to the transformer on the micro panel.
14. Wire tie the neutral wire to the existing harness on the micro panel.
15. Plug the power supply plug (5) into the connector on the Power Supply. Attach the red wire to the + terminal and the black wire to the – terminal of the power connector on the CX-MicroGateway.

York Talk Connection

Communications between the CX-MicroGateway and chillers using York Talk 2 is via an RS485 connection. Port 2 on the CX-MicroGateway has 2 connectors; RS485 and RS232. The RS485 is a 5-pin screw type connector.

CAUTION

CAUTION: The Port 2 RS-485 connector is located near the DIP switches. Do not connect the micro panel to the LAN 5-pin screw type connector.

CAUTION

CAUTION: Incorrect wiring of the network, i.e., P3 to ground, P2 to P3, will likely result in damaging the RS485 driver chip.

A communications cable (11) is included with each kit. This cable connects between TB7 of the chiller micro board and the RS485 Port 2 connector on the CX-MicroGateway in the following manner:

Table 1 – York Talk Connections

MicroGateway (Port 2)	Micro Board (TB7)	Wire Color
P3	BAS+	Red
P2	BAS –	Black
GND	Open	Shield

When the cable is connected, be sure to use wire ties to secure the cable.

Controls Network Connection

The CX-MicroGateway connects to the YORK Control System network and is visible as is any other BACnet device (Figure 3).

Note that a termination module must be used at the end of each network segment. Also, cable shielding should be terminated to ground through the termination module.

Switch and Jumper Settings

The CX-MicroGateway is preconfigured at the factory and, as such, will function out of the box. However, there are a few jumpers which should be verified and can be changed for specific instances.

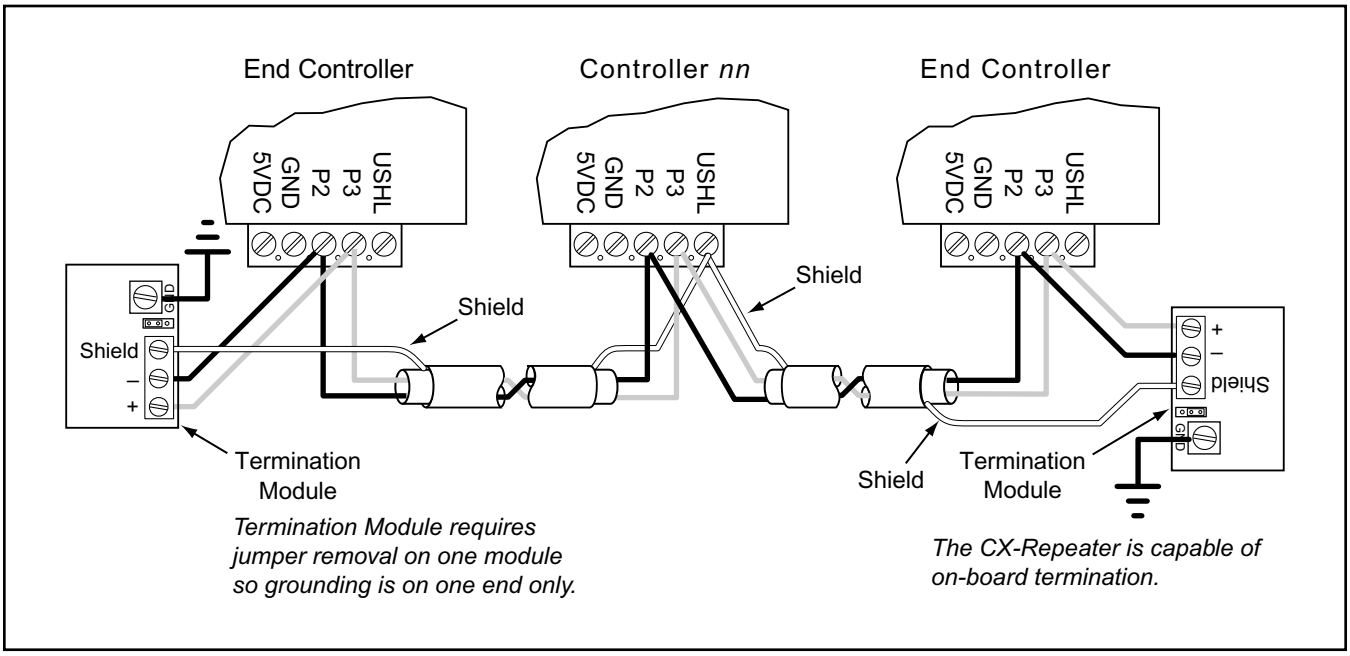

Figure 3. BACnet Control Network Connection

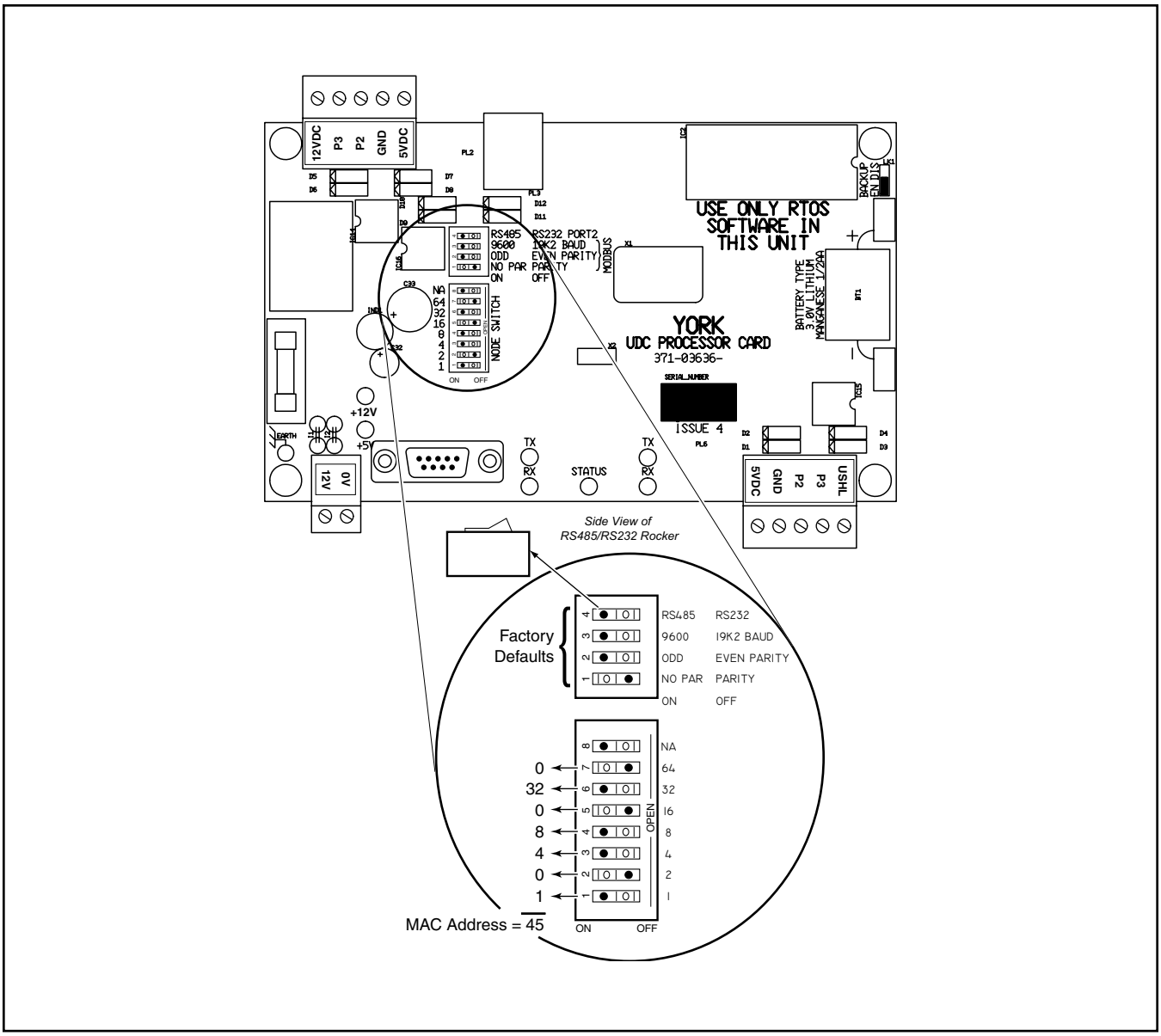

Figure 4. CX-MicroGateway DIP Switch Location

CX-MicroGateway Settings

The CX-MicroGateway DIP switches set various parameters, including the MAC Address and the active Port 2 connector. The MAC Address, along with the network number and other parameters, are used to identify the CX-MicroGateway on a BACnet network.

A DIP switch consists of individual rocker switches that are binary-weighted. In the case of a MAC Address, summing the value of the switches in the ON position forms the decimal value of the DIP switch. To determine the numeric value assigned to the switch, sum the value of each rocker in the ON position. The result is the number (address) selected.

A smaller DIP switch sets communication parameters, specifically which connector is used, i.e., RS232 or RS485. These should remain at the factory defaults (shown in Figure 4).

Micro Panel Settings

YCAS 2-Compressor chillers currently use a 031-01095-xxx micro board. This board includes several jumpers which must be properly set to allow communication with the CX-MicroGateway.

NOTE

NOTE: Additional settings are available for the YCAS 2-Compressor chiller. Refer to the documentation included with the chiller for a complete list of possible settings and the location of the jumpers and switches.

The communication cable between the chiller and CX-MicroGateway is connected to TB7 on the micro board. This connector is capable of communicating in either a RS232 or RS485. It must be set to communicate in RS485. Verify that jumper J19 is set to RS485 before attempting to establish communication between the chiller and CX-MicroGateway.

To identify the chiller on the York Talk network, an address must be established. The CX-MicroGateway is factory configured to communicate with node 1 on the York Talk network.

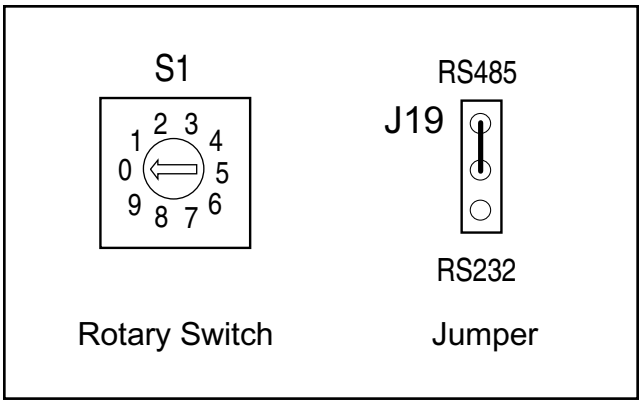

Figure 5. Micro Panel Settings

A rotary switch on the micro board sets the chiller ID. A chiller ID of 0 corresponds to node 1, a chiller ID 1 corresponds to node 2, etc.

Verify that the chiller rotary switch is set to 0 before attempting to establish communication between the chiller and CX-MicroGateway.

SECTION 3

COMMISSIONING

General

Once the hardware is installed and wired the CX-MicroGateway can be configured for a specific mode of operation through software, if necessary. This allows data, such as histories and alarms, to be directed to other controllers or an ISN ConneXsys Operator Work Station.

Communication to the CX-MicroGateway can be accomplished through a computer (PC) or a Keypad and Display Module such as the one used by the CX-UDC controller. Typically, a PC is used for programming while the Keypad and Display is used to make minor changes or by the customer to review alarms.

PC Communication

NOTE

NOTE: The CX-MicroGateway is shipped from the factory configured to communicate to the chiller. It cannot communicate to a PC without changing the Port 2 parameters using a Keypad and Display Module. Alternately, an "Open Link" command can be done across the BACnet network through another controller which is capable of communicating with a PC.

When connecting via computer, IcE or a VT100 terminal interface and null modem cable is required. The computer's serial port connects to the CX-MicroGateway via the RS232 connector of Port 2, which is a DB-9 connector. Since the YCAS 2-Compressor chiller also communicates using Port 2 via the 5-pin RS485 connector, both devices can be connected at the same time but only one connector can be active at the same time. The active connector is selected using the "top" rocker on the DIP switch labeled RS485 and RS232.

The remaining three rockers on the 4-way DIP switch on the CX-MicroGateway must also be configured properly for the two devices to communicate with the baud rate and parity settings matching those of the computer. Typically, these do not change and should remain as set at the factory to 9600, odd, and on parity (Figure 5).

Changing Port 2 Communication

Before the PC can communicate with the CX-MicroGateway, Port 2 must be configured to use the RS232 connector through the Keypad and Display Module. To change the setting:

1. Plug the Keypad and Display Module into the DISPLAY connector on the CX-MicroGateway.
2. Press Enter and type the password to access the software.
3. Go to Feature 45, Page 03. Change the Channel 2 setting from YT2 V6 to ISN7 (Channel 1 is not accessible).
4. Go to Feature 45, Page 05. Change the transfer rate (BPS) of Channel 2 from 4800 to 9600.
5. Disconnect the Keypad and Display.

Configuration

The CX-MicroGateway utilizes a configuration file which is loaded at the factory before shipment of the unit. In addition to the communication parameters for each chiller type, the CX-MicroGateway is configured to extract certain data from the chiller. The data obtained by the CX-MicroGateway is listed in a York Talk Points List.

The CX-MicroGateway operates as configured at the factory exposing the chiller data to the BACnet MS/TP network. A list of the exposed chiller data, or York Talk Points List, can be downloaded by YORK service personnel at

http://intranet.york.com/web0147

In addition, the configuration file can also be downloaded from this website. The configuration file shares the same part number as the CX-MicroGateway board number. Both items are listed on the board label. The configuration file revision number is also listed which cross-references to the appropriate York Talk Points List. The York Talk Points List also lists the appropriate chiller EPROM/Flash to ensure the correct points and data are being used for each installation.

Table 2 – Analog History

SECTION	DESCRIPTOR (P01)	INTERVAL (P03)	I/O POINT (P04)
S01	LCHL_TEMP	60 MINS	201 LCHL_TEMP
S02	RCHL_TEMP	60 MINS	202 RCHL_TEMP
S03	AMB_TEMP	60 MINS	206 AMB_TEMP
S04	CHL_SP	1 MINS	401 CHL_SP
S05	%CURR_LIMIT	1 MINS	402 %CURR_LIMIT
S06	LCHL_TEMP	1 MINS	201 LCHL_TEMP
S07	RCHL_TEMP	1 MINS	202 RCHL_TEMP
S08	AMB_TEMP	1 MINS	206 AMB_TEMP
S09	S1_SUCT_PRES	1 MINS	209 S1_SUCT_PRES
S10	S1_DISC_PRES	1 MINS	210 S1_DISC_PRES
S11	S1_OPER_CODE	1 MINS	226 S1_OPER_CODE
S12	S1_FAULT_COD	1 MINS	227 S1_FAULT_COD
S13	S2_SUCT_PRES	1 MINS	218 S2_SUCT_PRES
S14	S2_DISC_PRES	1 MINS	219 S2_DISC_PRES
S15	S2_OPER_CODE	1 MINS	228 S2_OPER_CODE
S16	S2_FAULT_COD	1 MINS	229 S2_FAULT_COD

Table 3 – Digital History

SECTION	DESCRIPTOR (P01)	DELAY CYCLES (P03)	I/O POINT (P04)
S01	STOP_START	1 CYCLES	601 START_STOP
S02	SYS1_ALARM	1 CYCLES	501 CHL_RUN_STAT
S03	EVP_PMP_STA	1 CYCLES	504 EVP_PMP_STAT
S04	SYS2_ALARM	1 CYCLES	502 CHL_ALM_STAT
S05	YT_ALARM_1	1 CYCLES	609 YT_ALARM_1
S06	CHILLR_FAULT	1 CYCLES	611 CHILLR_FAULT

When the installation is complete, the York Talk Points List must always be provided to the customer/ contractor and a copy included in the job folder.

Data Transfer

History

The CX-MicroGateway is preconfigured to collect some history data. This data can be viewed or plotted to track the history of various data for comparison purposes or used as a tool for troubleshooting.

The collected History data can be forwarded to the ISN ConneXsys OWS and viewed graphically.

Alarms

The CX-MicroGateway is preconfigured to monitor the appropriate chiller fault codes and chiller communication status. If a fault code occurs or communication does not operate properly, an alarm is generated in the CX-MicroGateway. Alarms can be forwarded to another controller or to an ISN ConneXsys OWS. A CX-Router can also be used to forward alarms to e-mail addresses or cell phones.

For YCAS 2-Compressor chillers Table 4 shows the analog alarms. Each of the alarms must be directed to an appropriate location, either another controller or the OWS to alert personnel.

Table 4 – Analog Alarms

F11 S01 HVAC
P02 ANALOG POINT 227 S1_FAULT_COD 0.0
P03 ALRM CLASS 2 HVAC INDEX 0
P05 ALARM 1 LIMITS LO 0.0 HI 0.8
P11 ALARM DELAY 3 CYCLES
P12 ALARM MASTER 601 START_STOP
P14 ALARM OUTPUT 611 CHILLR_FAULT

F11 S02 HVAC
P02 ANALOG POINT 229 S2_FAULT_COD 0.0
P03 ALRM CLASS 2 HVAC INDEX 0
P05 ALARM 1 LIMITS LO 0.0 HI 0.8
P11 ALARM DELAY 3 CYCLES
P12 ALARM MASTER 601 START_STOP
P14 ALARM OUTPUT 611 CHILLR_FAULT

An additional York Talk communication status flag is exposed to the BACnet network. This flag, 609 (BV01), is mapped from F54P02 to F20P05.

If alarms are to be transferred to another location, the location must be configured within the software. This requires familiarity with the OCS firmware and Feature-Section-Page architecture.

Associated Graphics

The CX-MicroGateway, and other ISN ConneXsys products, are automatically associated to a graphic in the ISN ConneXsys OWS. There are situations where this graphic association may require modification. This can be accomplished through the PC or a Keypad and Display Unit.

The graphic file is listed in Feature 45, Page 15. This graphic file must reside in the appropriate directory on the ISN ConneXsys OWS PC. If the name of the file listed in Feature 45 Page 15 is changed, the new file is called up when the appropriate CX-Micro-Gateway is selected via the OWS.

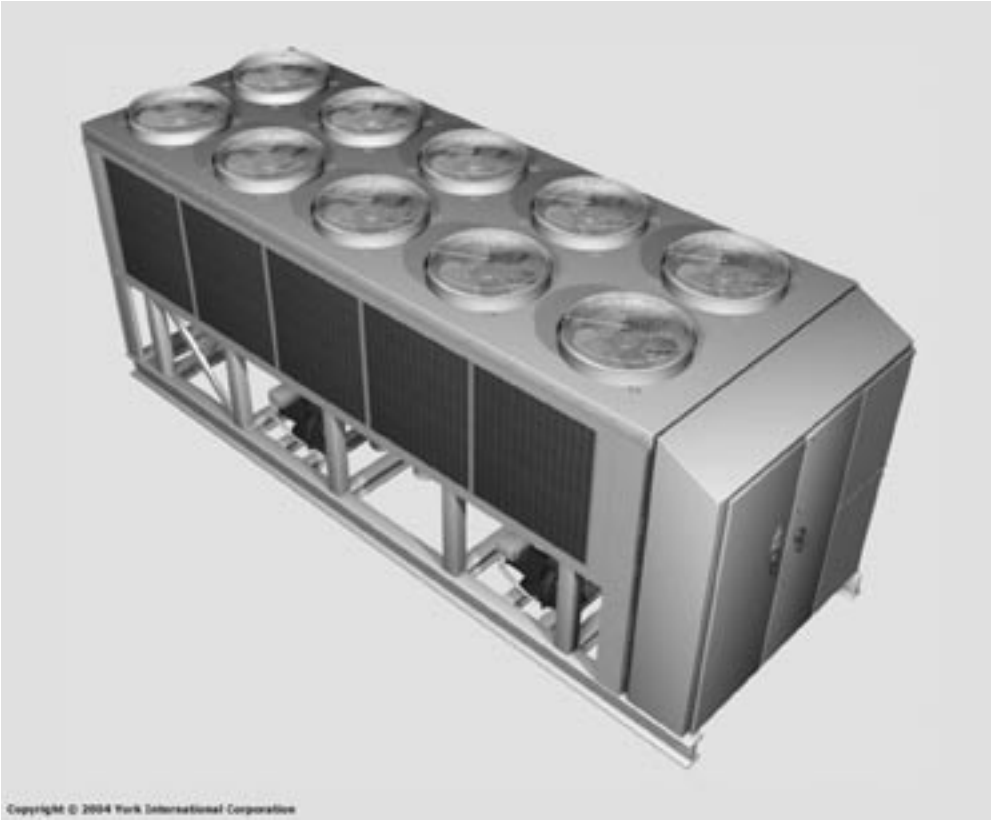

Figure 6. Default Graphic

The default graphic for YCAS 2-Compressor chillers is

YCAS.gpc

Although the actual file is color, a grayscale image of this graphic is shown in Figure 6.

The default unit descriptor is CHILLER_1. When multiple units are used, the unit descriptor should be modified to identify the different units. (The graphic will remain the same – only the unit label on the text wrapper will change.) To change the unit descriptor, modify Feature 60 Page 01.

SECTION 4

TROUBLESHOOTING

LEDs

The CX-MicroGateway utilizes LEDs at the LAN port and Port 2, which can be RS232 or RS485. Each port has a TX and RX LED. Port 1 uses RS485 and Port 2 normally uses RS232. The red LED indicates data reception and the green LED indicates data transmission.

Two additional status LEDs on the CX-Micro-Gateway indicate the status of the LAN voltage (+5V) and I/O voltage (+12V). If the +5V LED is off, voltage is not available for the LAN.

NOTE

NOTE: The I/O voltage is not used in the CX-MicroGateway application.

The Status LED on the CX-MicroGateway indicates a processor fault or the software status.

The following table indicates the codes used by the Status LED.

Table 5 – Status LED Codes

LED	Code
OFF	System is OFF or has failed (crashed).
ON	System is operating correctly.
Quick Flash	(1.6 sec on, 0.2 sec off) System is resetting.
2 flashes	System is in the UNCONFIGURED mode.
3 flashes	System is in the HALT mode.
4 flashes	System is in the MONITOR mode.
5 flashes	System has UNACKNOWLEDGED alarms.
10 flashes	System is in the RTOS mode (application is not loaded).

Software Version

In certain situations, it may be necessary to replace the CX-MicroGateway configuration file. This can be done using IcE. However, if a change is made, it should be documented on the board label if possible.

If there is a question regarding the configuration file version it can be checked within the software on Feature 50 Section 01 Page 36. If this does not match the number and revision number on the board label, the configuration has been modified.

NOTE

NOTE: It is possible to modify the configuration file without changing the Application Name in f50s01p36.

Battery Replacement

Located on the CX-MicroGateway is a lithium battery. The battery prevents the loss of the Real Time Clock in the event of a power failure. Typical life of a battery is 2 years of operation or 5 years of non-use (storage).

WARNING

WARNING: Personnel should always be grounded before touching any electronic components. An Anti-Static Ground Strap is recommended. As a minimum, firmly grasp grounded metal before working on the unit.

CAUTION

CAUTION: Dispose of used batteries in a safe manner. Follow all local, state and country codes regarding disposal of old batteries.

Located next to the battery is a Battery Enable Jumper. The Battery Enable Jumper allows the Real Time Clock to be disabled or reset.

Fuse Replacement

Located on the CX-MicroGateway is a 5 x 20 Slow-Blow, 3.15-amp fuse. This fuse protects the CX-MicroGateway components against electrical supply overload. Additionally, the Power Transformer includes 2 fuses, These are 5 x 20 Fast-Blow fuses, one at 150 mA and the other at 1.25 amps.

If a fuse melts, indicating a power overload, determine the cause of the overload before replacing the fuse.

WARNING

WARNING: Personnel should always be grounded before touching any internal components. An Anti-Static Ground Strap is recommended. As a minimum, firmly grasp grounded metal before working on the unit.

CAUTION

CAUTION: Always replace the fuse with a similarly rated fuse or damage to the components may occur.

To replace the fuse:

1. Remove the connector at TB1 on the Power transformer.
2. Disconnect the LAN from Port 1 by removing the connector at Port 1 on the CX-MicroGateway.
3. Remove the appropriate fuse cover and replace the fuse.
4. Install the fuse cover with the new fuse into the fuse housing.
5. Re-attach the connector at TB1 on the Power Transformer.
6. Check the 12 VDC and 5 VDC LEDs on the CX-MicroGateway to ensure proper operation before re-connecting the LAN.

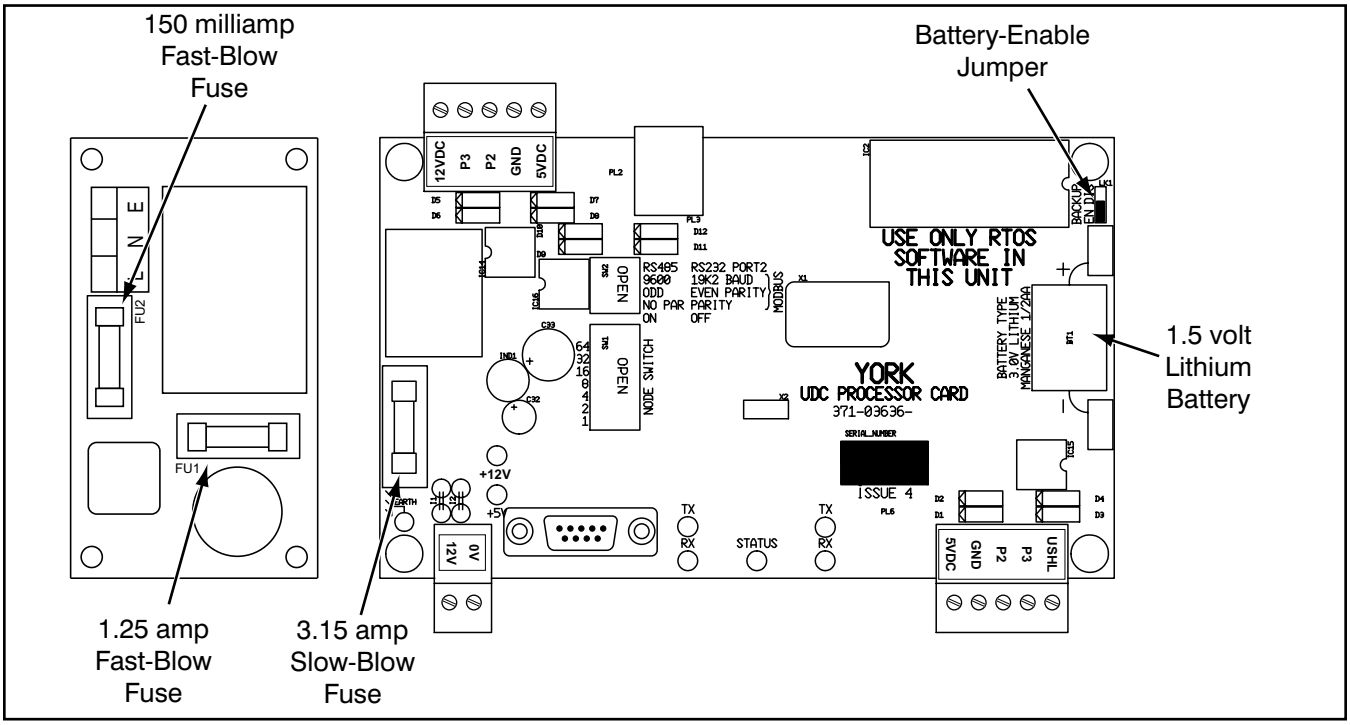

Figure 7. Battery and Fuse Locations

APPENDIX

Specifications

General	
Power Source	12 VDC ±10%
Protection	3.15 A Slow-Blow Fuse
Power Consumption	200 mA Nominal
Operating Environment	0 to 160° F (-18 to 71° C) 10 to 95% non-condensing
Size (H x W x D)	3.9 x 6.7 x 1.8 in. (100 x 170 x 45 mm)
Weight	0.5 lb. (0.2 kg)
Processor	
Processor	NEC V25 Operating at 8 MHz
Memory	32 kbytes
BRAM Memory	512 kbytes
FLASH Memory	480 kbytes w/ 10 yr. retention
RTC Accuracy	±30 seconds per year
Battery Life	Approximately 1 year of operation, 5 years of storage
Interface	
LAN (Port 1)	BACnet MS/TP; RS485
LAN Speeds	9.6, 19.2, 38.4 kbaud
LAN Connection	5-pin screw terminals
LAN Cable	Shielded Twisted-Pair (Belden 9841 or Equivalent)
Chiller (Port 2)	York Talk 2 (RS485) or York Talk 3 (RS232)
Port 2 Connections	DB-9 (RS232) or 5-pin screw terminal (RS485)
LEDs	Controller Status; LAN Communication; Channel Status
Switch Selections	MAC Address (1-99), Port 2 Configuration (RS232 or RS485)
Programming	IcE/VT100 Terminal Emulation
Power Supply (York Talk 2 kits only)	
Power Source	115 ±15% VAC
Frequency	60 Hz ±10%
Output Power	12 VDC
Protection	150 mA Fast-Blow Fuse
Size (H x W x D)	3.0 x 4.0 x 1.8 in. (76 x 102 x 45 mm)
Weight	1.0 lb (.4 kg)
Compliance	
UL916 Listed	
FCC Part 15 Class A	
CE Directives EN55022	
Ordering Information	
YD OptiView w/ Standard	371-04483-051
YK OptiView w/ Standard & SSS	371-04483-052
YK OptiView w/ VSD	371-04483-053
YST OptiView	371-04483-054
YT OptiView w/ Standard & SSS	371-04483-055
YT OptiView w/ VSD	371-04483-056
YR and YS OptiView	371-04483-057
YCAL	371-04483-001
YCAS 2-Compressor*	371-04483-002
YCAS 3 & 4-Compressor (Master/Slave)*	371-04483-003
YCUL (DAT)	371-04483-004
YCRS* and YCWS*	371-04483-005
YCAV	371-04483-006

** Style G only*

NOTES

NOTES

P.O. Box 1592, York, Pennsylvania USA 17405-1592

Form 450.24-N6 (804)

Tele. 800-861-1001 website: www.york.com