Functional Devices, Inc.
310 South Union Street
Russiaville, IN 46979

Office 765.883.5538
Sales 800.888.5538
Fax 765.883.7505

www.FunctionalDevices.com
sales@FunctionalDevices.com

LISTED

Made in USA
Meets
"Buy American"
of ARRA 2009

AC Sensors Low-Voltage-Switching

RIBXK Series

Enclosed Solid Core AC Sensors

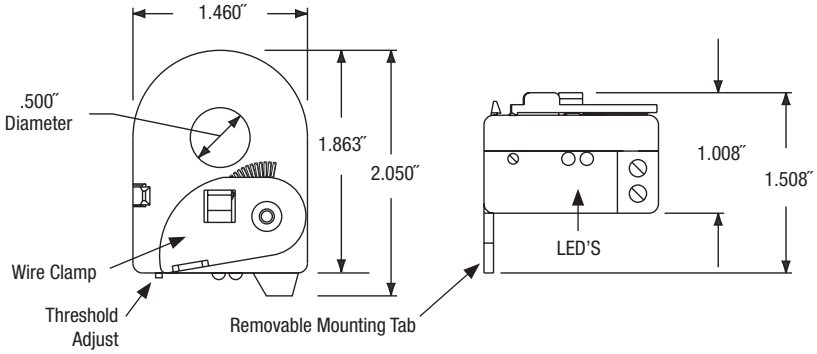

SPECIFICATIONS

Operating Temperature: -30 to 140° F
Humidity Range: 5 to 95% (noncondensing)
Max Sense Voltage: 600 Vac
Approvals: UL Listed, UL916, UL864, C-UL, California State Fire Marshal, CE, RoHS
Housing Rating: Plenum, NEMA 1
Mounting/Installation: Removable mounting tab provided. The wire clamp locks against the load wire, securing the unit in place.

Sensor Output
Solid State Contact, 30 Vac/dc,
.4 Amp Max. RIBXKF, RIBXKTF
.8 Amp Max. RIBXKA, RIBXKTA

When current sensor status is off (open), leakage <30 uA @ 30Vac/dc
When current sensor status is on (closed), voltage drop < .3 Vac/dc @ .1 Amp
< 1.6 Vac/dc @ .4 Amp

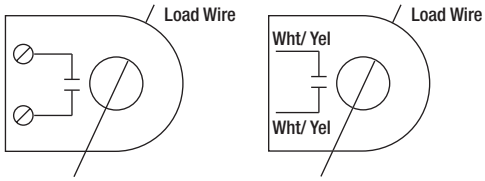

RIBXK Series Selection Guide

MODEL #	RANGE	TYPE	THRESHOLD	OUTPUT		LED 1	LED 2
RIBXKF	.25-150 Amp	Solid Core	Fixed, .25 Amp	Solid State Switch	SPST ; 30 Vac/dc ; .4 Amps Max (Wht/Yel 16″ 18 AWG Wire Leads)		
RIBXKTF	.25-150 Amp	Solid Core	Fixed, .25 Amp	Solid State Switch	SPST ; 30 Vac/dc ; .4 Amps Max (Terminal Strip, Accepts #14-22 AWG Wire)		
RIBXKA	.50-150 Amp	Solid Core	Adjustable	Solid State Switch	SPST ; 30 Vac/dc ; .8 Amps Max (Wht/Yel 16″ 18 AWG Wire Leads)	Over Trip Point	Under Trip Point
RIBXKTA	.50-150 Amp	Solid Core	Adjustable	Solid State Switch	SPST ; 30 Vac/dc ; .8 Amps Max (Terminal Strip, Accepts #14-22 AWG Wire)	Over Trip Point	Under Trip Point

Notes